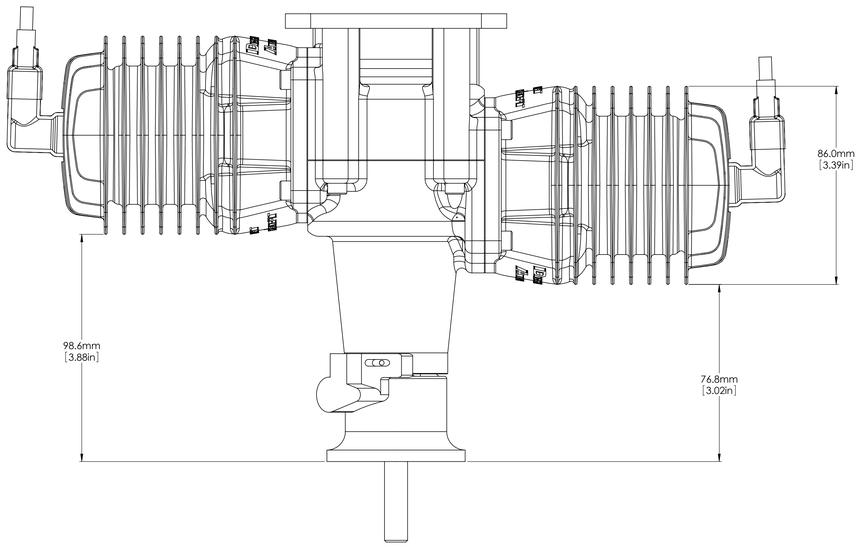

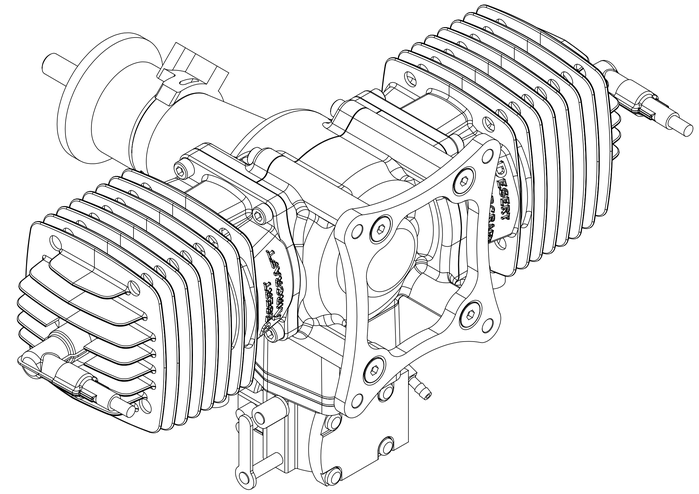

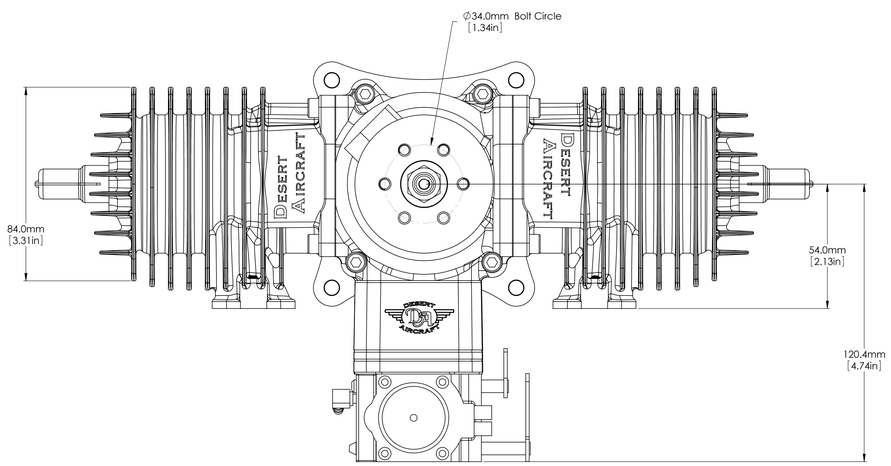

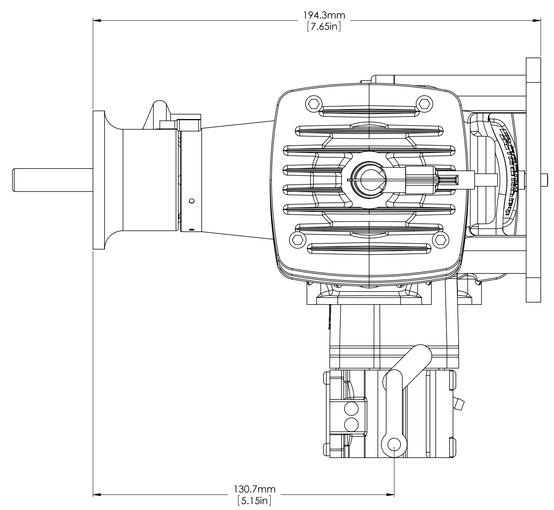

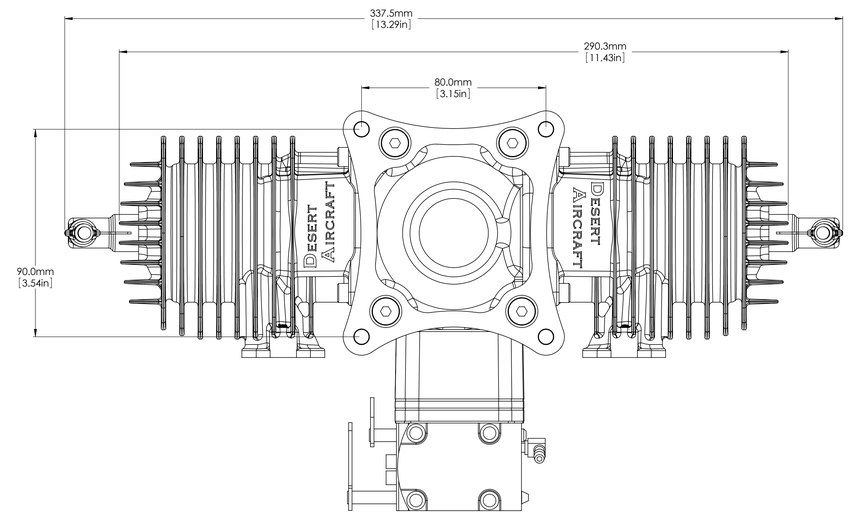

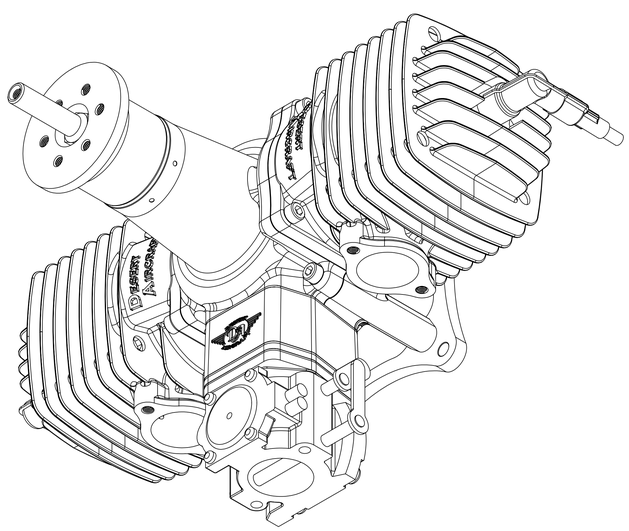

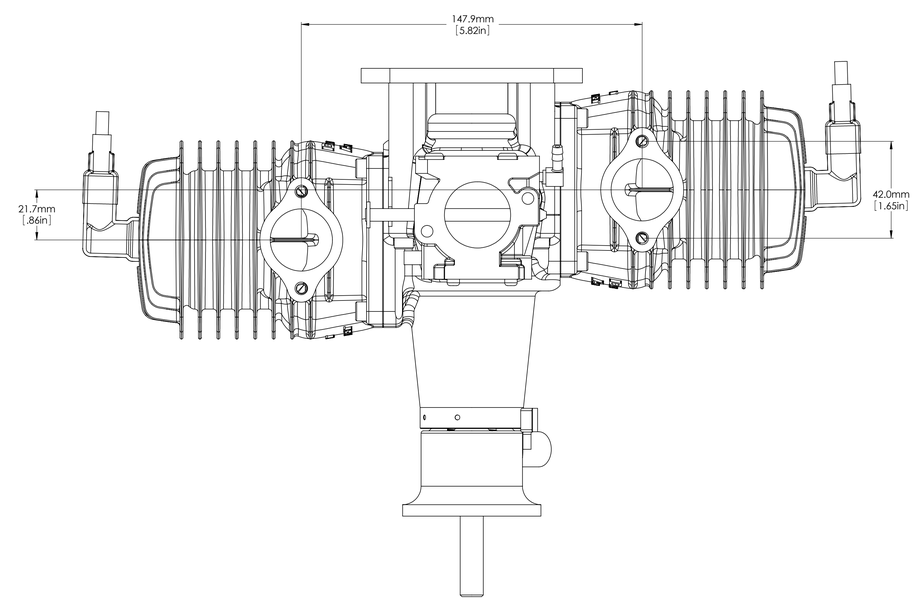

Desert Aircraft DA-170 M 1:1